40018264

Instructions de montage
Original mounting instruction 18/06/18 PVA

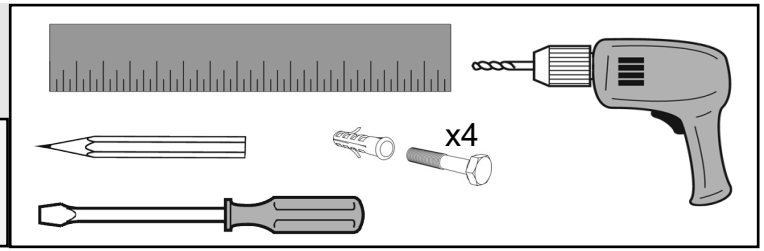

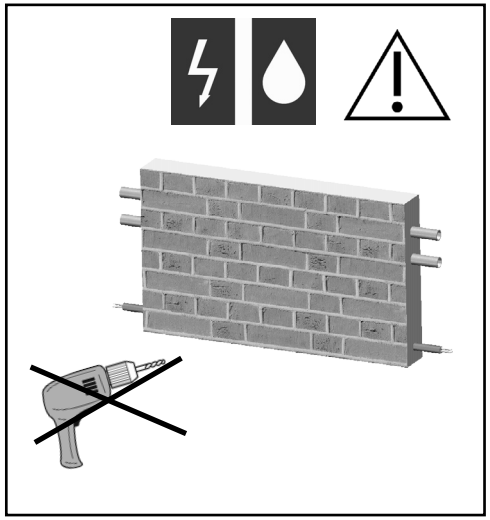

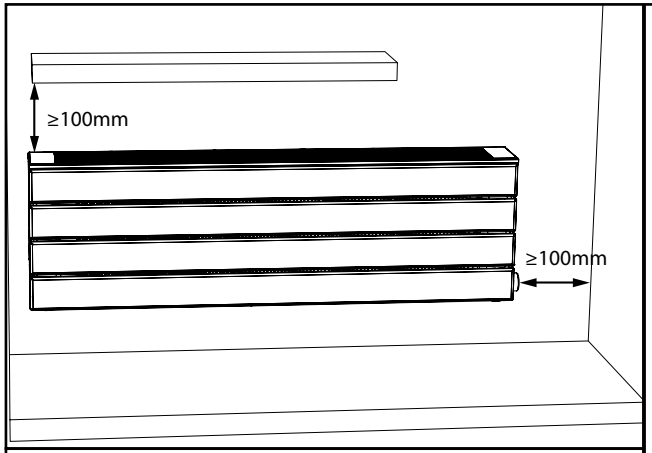

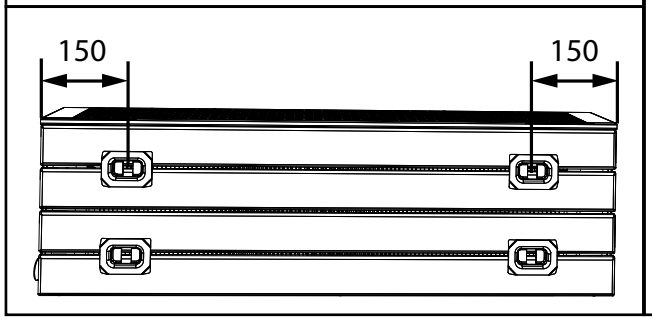

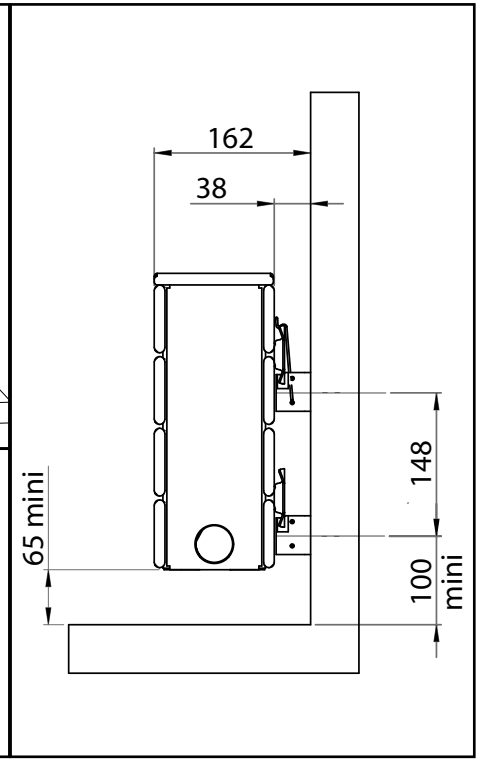

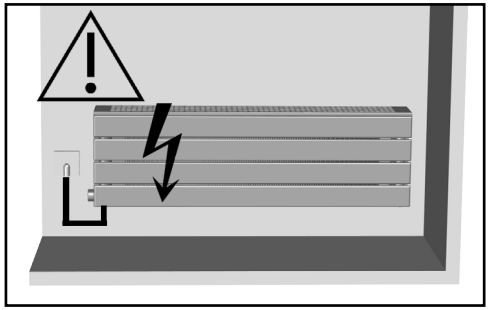

≠

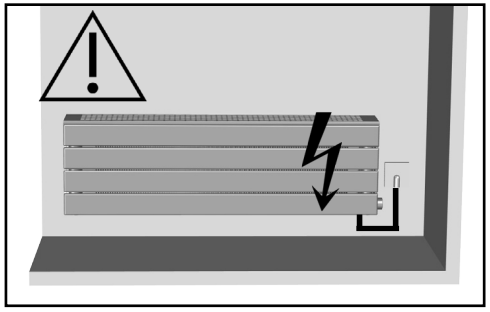

	L (mm)
TVLXD-050-050/F	500
TVLXD-075-080/F	800
TVLXD-100-100/F	1000
TVLXD-150-150/F	1500
ROEPD030-050/F	500
ROEPD030-075/F	800
ROEPD030-100/F	1000
ROEPD030-150/F	1500

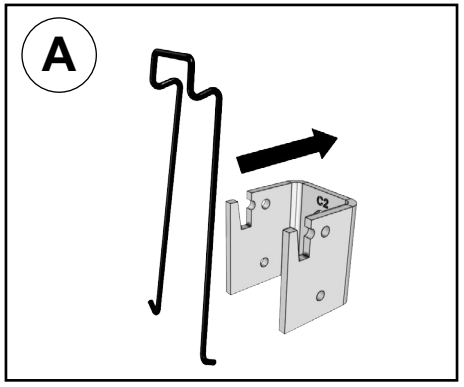

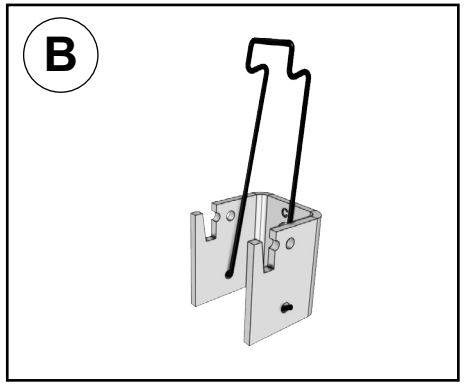

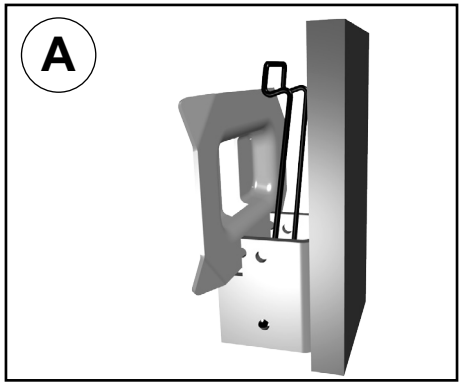

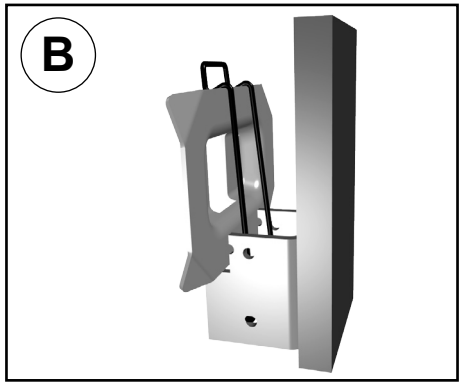

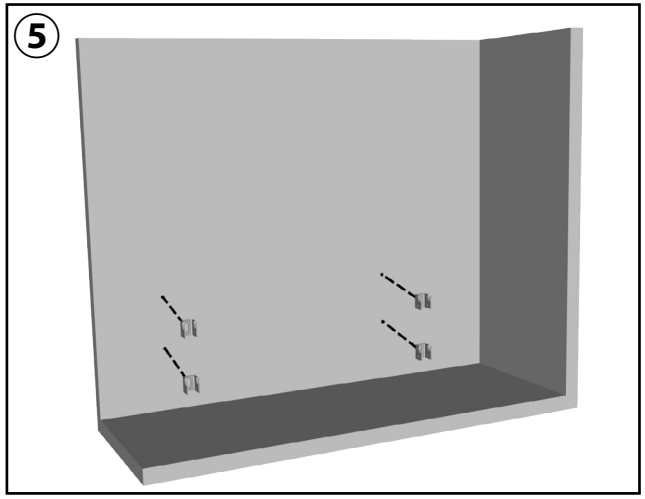
5

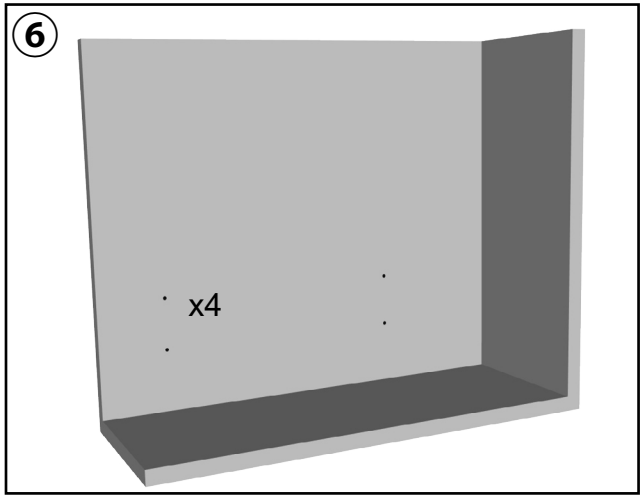
6
x4

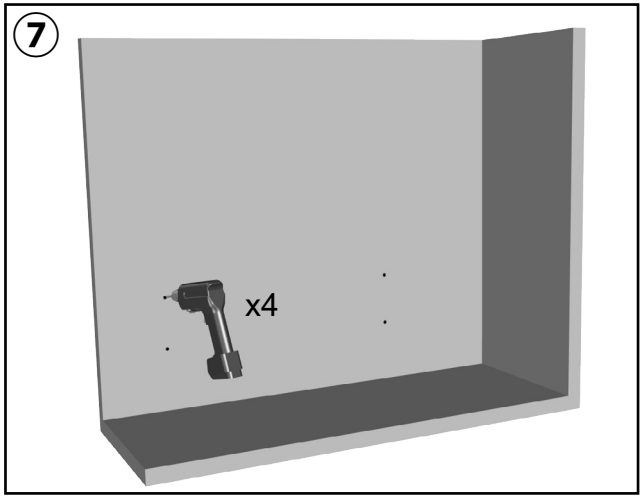
7
x4

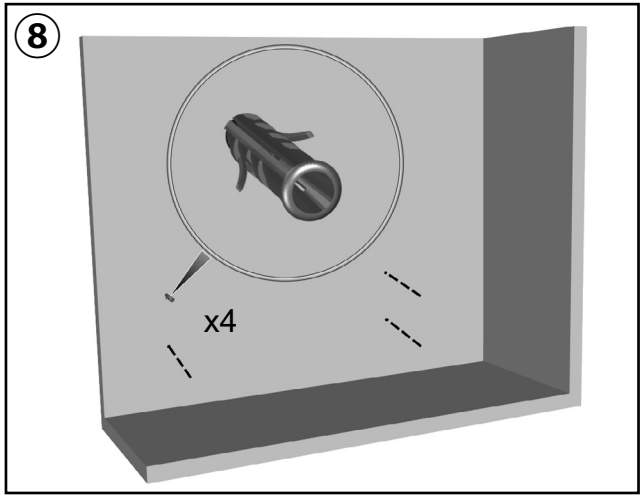
8
x4

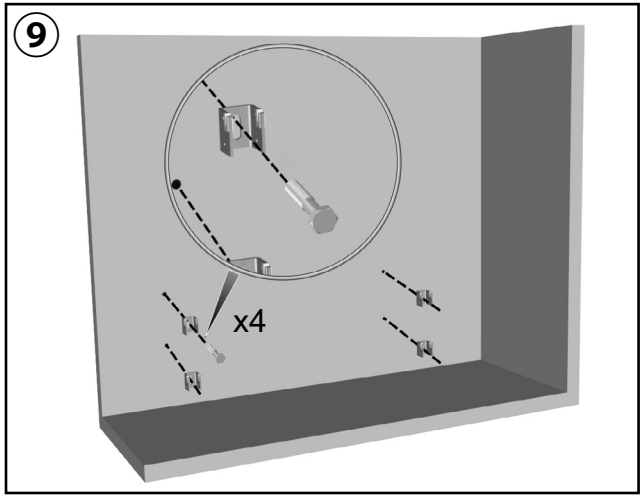
9
x4

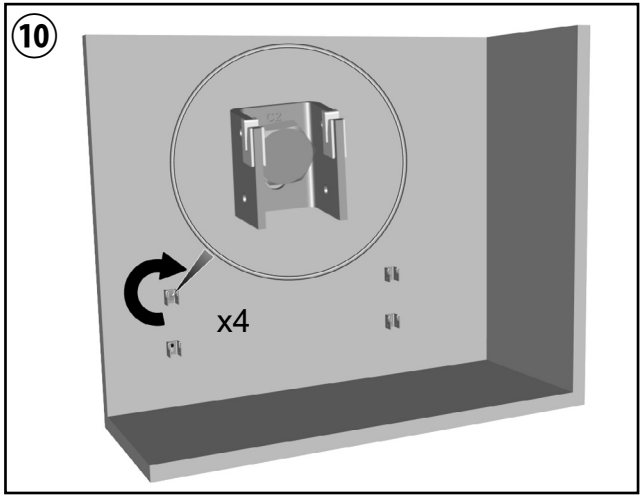
10
x4

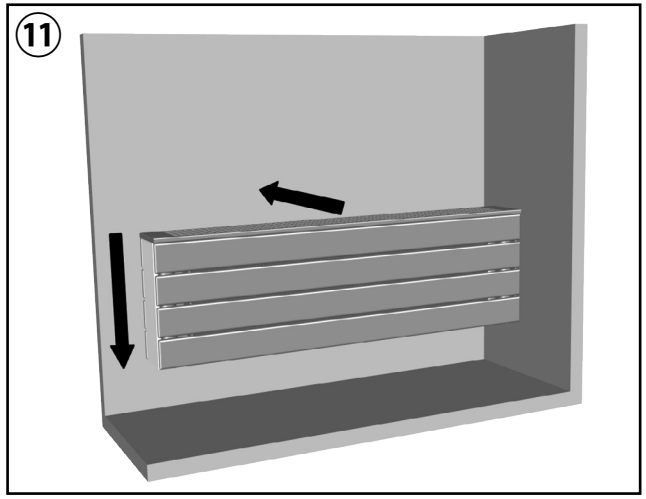
11

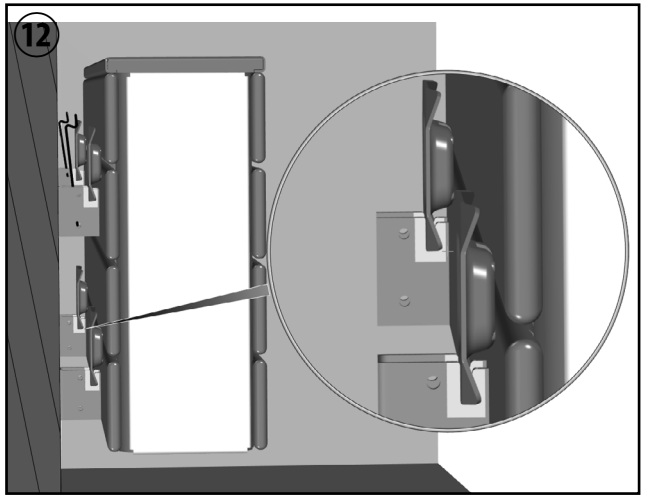
12

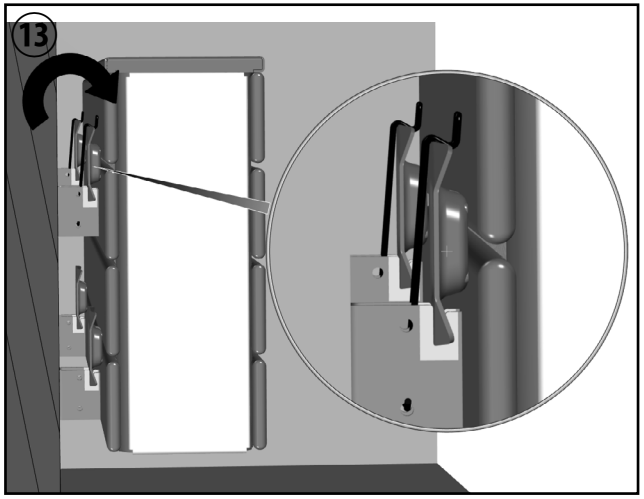
13